Kitchen
VENTILATORS AND HOODS
Bathroom
VENTILATORS AND LIGHTS
ELECTRIC WALL HEATERS
Trade-Wind
MOTORFANS, INC.

The *Trade-Wind* FAMILY of VENTILATORS *and* HEATERS

adds comfort to small rooms

KITCHEN VENTILATING HOODS

This is the beautiful SALEM HOOD in rich antique copper. Pre-wired with exclusive Touch-Bar switch and light. 5 standard lengths.

The remarkable new TRADE-WIND OVEN VENTILATING HOOD for built-in ovens. Two styles match Trade-Wind range hoods. Pre-wired with switch and automatic thermostat control. 3 standard lengths in copper, stainless steel and antique copper.

1501 VENTILATOR for use with Trade-Wind Hoods or for ceiling installations. New striking louvered grille. Twin blowers develop 300 CFM.

The STATIONARY HOOD. Stunning modern styling in stainless steel and brushed copper. Pre-wired with exclusive Touch-Bar switch and light. 5 standard lengths.

KITCHEN VENTILATORS

3501 VENTILATOR. The most complete ventilating system on the market for cabinet installation with filtered inlets above range and at ceiling level. Twin blowers develop 550 CFM.

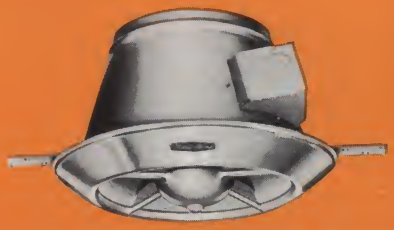

AXIAL FLOW VENTILATOR AF-7. This efficient, time-tested unit is used in the Patrician Ventilating Hood, or can be installed in ceiling or side wall. Develops 300 CFM.

The budget-priced PATRICIAN VENTILATING HOOD. Complete, pre-wired package with Axial Flow Fan, light, switch and filter grille. Satin chrome and coppertone finishes. 5 standard lengths.

2501 VENTILATOR for use with Trade-Wind Hoods or for ceiling installation. Handsomely styled new louvered grille. Twin blowers develop 425 CFM.

REPLACEMENT OR REFUND OF MONEY
Guaranteed by Good Housekeeping
IF NOT AS ADVERTISED THEREIN

Trade-Wind Ventilators and Hoods have been granted the Good Housekeeping Seal of Approval.

YOU GET MORE WITH TRADE-WIND

The acknowledged success of Trade-Wind products over the past 23 years has been built on three basic requirements—the excellence and originality of design – quality manufacture – and fine craftsmanship. Many of the first Trade-Wind Ventilators are still giving faithful service.

Trade-Wind products live up to every claim made for them in performance ratings and in dependability for long, troublefree service.

BATHROOM VENTILATORS

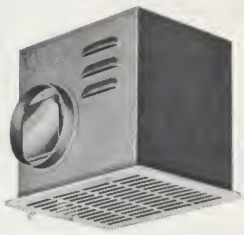

1201 VENTILATOR. Compact ceiling ventilator for complete bathroom ventilation. Meets F.H.A. requirements for inside bathrooms. 100 CFM.

FULL LENGTH

Trade-Wind Heaters combine radiant and convection heating. The striking design of the new louvered grilles allows full infra-red radiation and boosts the natural convection of the rising air.

BUILT-IN BACKDRAFT DAMPERS. All Trade-Wind blower-type Ventilators are equipped with backdraft dampers built into the discharge collar. A damper also is available for the Axial Flow Fan.

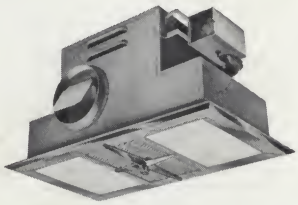

1701 LIGHT/VENTILATOR. Another exclusive Trade-Wind design providing both ventilation and light in the bathroom. Mounts flush in ceiling. Beautiful chrome and glass grille. 100 CFM ventilator with built-in backdraft damper. Uses two 75W lamps.

TRADE-WIND EXTRAS

SLIDE FILTERS. Easy-to-reach filters which slide out like a drawer are now available on all Trade-Wind blower-type Ventilators for cabinet installation over a hood. The filters are cleanable in soap and water.

5-YEAR GUARANTEE. All Trade-Wind Ventilators are guaranteed to the original owner for 5 years. Repairs or replacements are made on a prorata basis – the 1st year the entire cost is borne by the factory, 2nd year 4/5, 3rd year 3/5, 4th year 2/5, 5th year 1/5. Unit must be returned prepaid to factory.

WALL INSERT ELECTRIC HEATERS

STANDARD

Trade-Wind has engineered better heating, easier installation and finer appearance into these Wall Insert Electric Heaters. The exclusive grille design promotes more efficient heating, and new mounting bars speed up installation. 17 models for 115 and 230 volt operation are available.

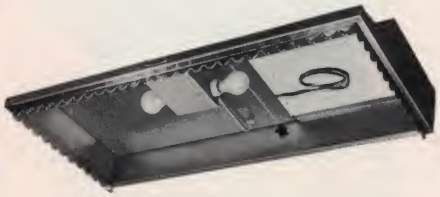

PRE-WIRED HOODS. All Trade-Wind hoods are completely pre-wired with light and control switch – doing away with excessive installation time and permitting a simple electrical connection after the hoods are fastened to the cabinets.

LISTED UNDER REEXAMINATION SERVICE UL OF UNDERWRITERS' LABORATORIES, INC.

CSA A 479

UL APPROVED. Trade-Wind Ventilators carry both the Underwriters' Laboratory and Canadian Standards Association approved seals.

KITCHEN VENTILATING

VENTILATOR/HOOD COMBINATIONS

Use Trade-Wind Hoods in combination with Trade-Wind Ventilators for best results. Salem and Stationary Hoods may be equipped with any one of the ventilators illustrated below.

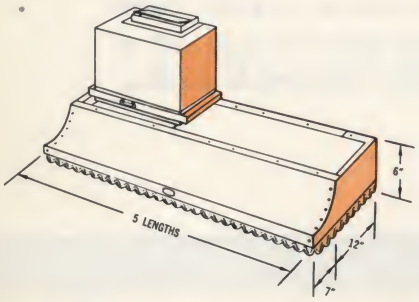

300 CFM

Trade-Wind Model 1501 Ventilator with 2566 Slide Filter installed on Salem Pre-Wired Hood. For light duty.

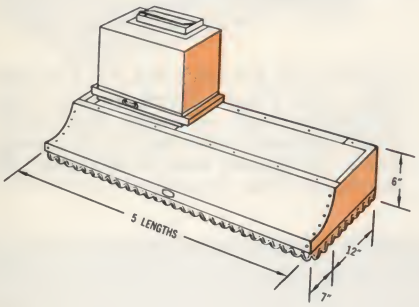

425 CFM

Trade-Wind Model 2501 Ventilator with 2566 Slide Filter installed on Salem Pre-Wired Hood.

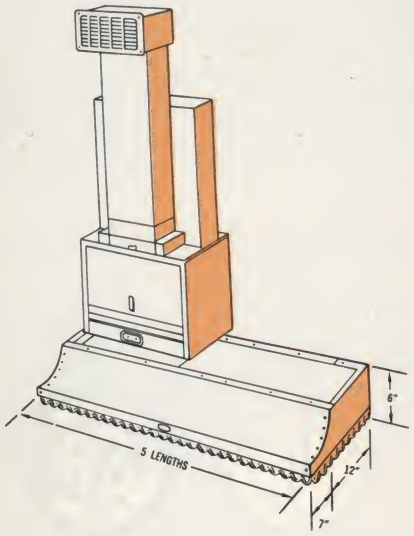

550 CFM

Trade-Wind Model 3501 Ventilator with dual filtered inlets installed on Salem Pre-Wired Hood. The finest!

SALEM

With scalloped edge and exposed rivet heads, the pre-wired Salem Hood follows the traditional early American styling and is one of the most popular kitchen fixtures today. The finish is rich antique copper. Base metal is sheet steel with solid copper lamination. The Salem is available in five standard lengths – 30", 36", 39", 42" and 48" – all equipped with the exclusive Trade-Wind baffle plate. The hood may be used with any of the three Trade-Wind Ventilators illustrated on this page.

2394 30" Antique Copper
2395 36" Antique Copper
2354 39" Antique Copper
2353 42" Antique Copper
2312 48" Antique Copper

TOUCH-BAR CONTROL

Both the Salem and Stationary feature the Trade-Wind exclusive Touch-Bar control. This finger-tip switch turns on each of the 3 ventilator speeds as well as the light.

PRE-WIRED HOODS*

All Trade-Wind Hoods are pre-wired at the factory to save installation time and simplify the electrical hook-up. The special top for the Salem and Stationary is cut out and scored for easy break-out, accommodating any of three Trade-Wind Ventilators shown above. The Ventilator can be installed at left, right or center of the hood.

*Unwired hoods also available. See price sheet.

HOODS by *Trade-Wind*

STATIONARY

The popular Stationary Hood in beautiful modern design enhances any decorating theme. The baffle plate evenly distributes suction into the ventilator and materially increases its efficiency. Stationary Hoods are available in choice of brushed copper and stainless steel. Five standard lengths are available without extra cost: 30″, 36″, 39″, 42″, 48″ in all finishes.

2594	30″	Stainless	2594R	30″	Copper
2595	36″	Stainless	2595R	36″	Copper
2554	39″	Stainless	2554R	39″	Copper
2553	42″	Stainless	2553R	42″	Copper
2512	48″	Stainless	2512R	48″	Copper

EXCLUSIVE BAFFLE PLATE

Trade-Wind Salem and Stationary Hoods are equipped with a baffle plate. It is suspended 3½ inches below the bottom of the cabinet and it evenly distributes suction under the entire hood. It protects the cabinet from direct heat from the burners and collects drippings in the event the filter is allowed to load with grease.

SLIDE FILTER

All Trade-Wind Ventilator/Hood combinations shown above are provided with handy, slide filters for easy, quick cleaning. Ventilator Model 1501 and 2501 use the exclusive Trade-Wind 2566 Slide Filter Kit, and Model 3501 has two built-in drawer-type filters.

VENTILATOR/HOOD COMBINATIONS

Use Trade-Wind Hoods in combination with Trade-Wind Ventilators for best results. Salem and Stationary Hoods may be equipped with any one of the ventilators illustrated below.

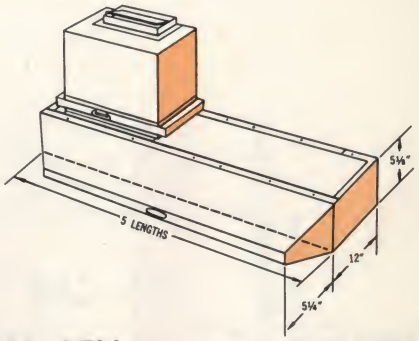

300 CFM

Trade-Wind Model 1501 Ventilator with 2566 Slide Filter installed on Stationary Pre-Wired Hood. For light duty.

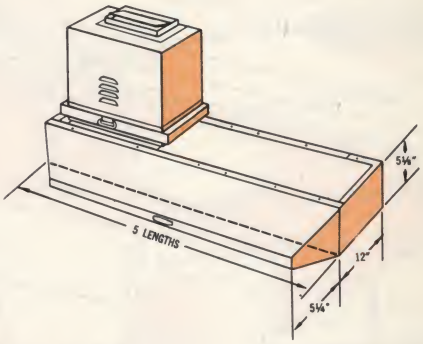

425 CFM

Trade-Wind Model 2501 Ventilator with 2566 Slide Filter installed on Stationary Pre-Wired Hood.

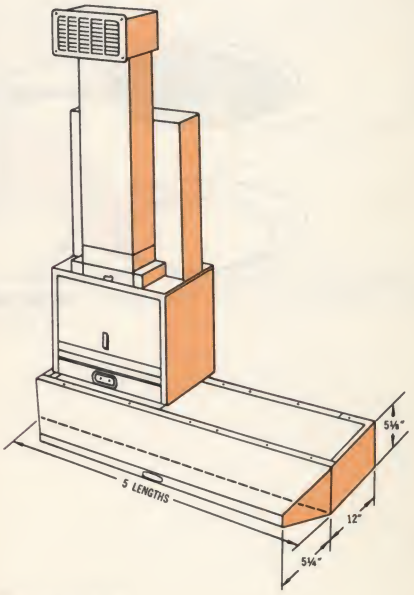

550 CFM

Trade-Wind Model 3501 Ventilator with dual filtered inlets installed on Stationary Pre-Wired Hood. The finest!

PATRICIAN

The Patrician Ventilating Hood is a complete packaged system. This includes the attractive hood which is available in 2 standard finishes and 5 standard lengths, the efficient 300 CFM Axial Flow Ventilator, a 9″ filter grille, and underhood light with switch that operates both light and ventilator. The entire assembly is pre-wired at the factory. The standard model is supplied with the Ventilator at the left. Center and right locations are available.

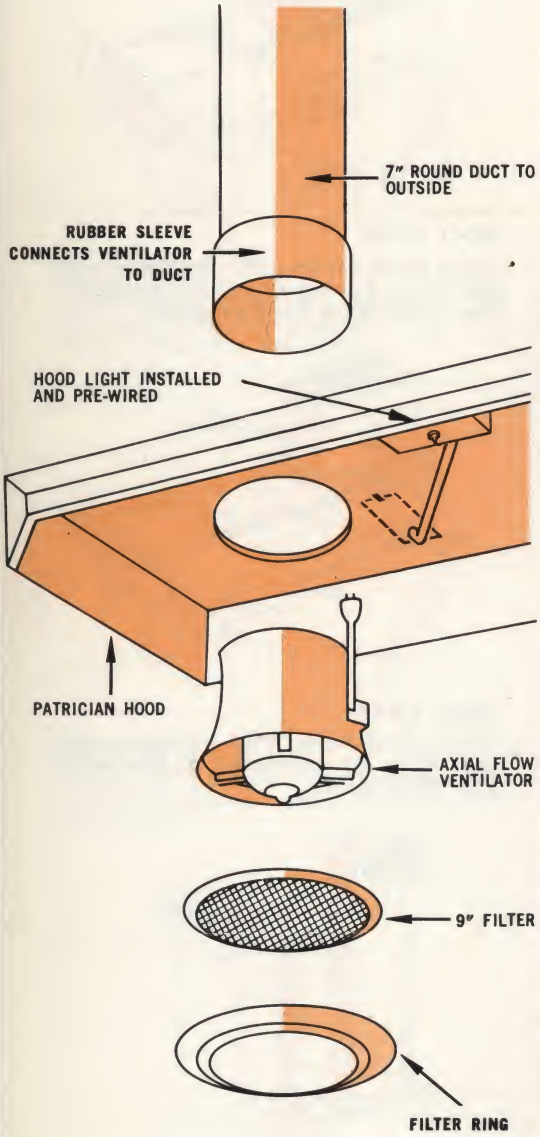

PATRICIAN SPECIFICATIONS

794 - 30″ Coppertone	894 - 30″ Satin Chrome
795 - 36″ Coppertone	895 - 36″ Satin Chrome
754 - 39″ Coppertone	854 - 39″ Satin Chrome
753 - 42″ Coppertone	853 - 42″ Satin Chrome
712 - 48″ Coppertone	812 - 48″ Satin Chrome

OVEN VENTILATOR

This is the remarkable new Trade-Wind Oven Ventilator for both built-in gas and electric ovens.

Engineered with more than adequate capacity to remove the blast of oven heat, odors and greasy air each time the door is opened . . . and to keep the kitchen comfortably cool as long as the oven is in use. In addition to a handy on/off switch, the ventilator is equipped with automatic thermostat control for complete protection.

There are two stunning hood styles and 3 finishes to match Trade-Wind range ventilating hoods. The units are completely pre-wired and the hoods are equipped with a snap-in, easy to clean filter.

Twin centrifugal blowers produce 300 CFM. The discharge is interchangeable from horizontal to vertical and the unit has a built-in backdraft damper.

Accessories for Trade-Wind Models 2501 and 1501 can be used on the Oven Ventilator.

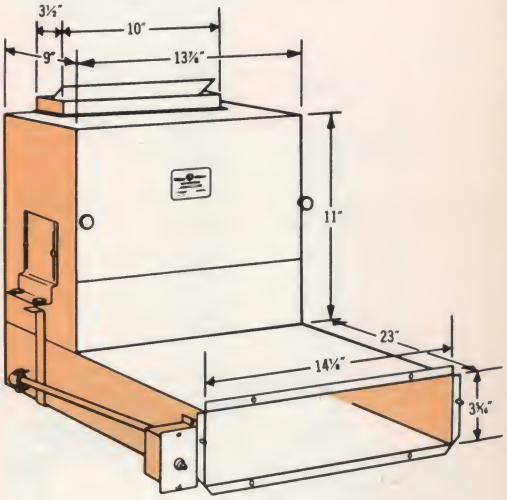

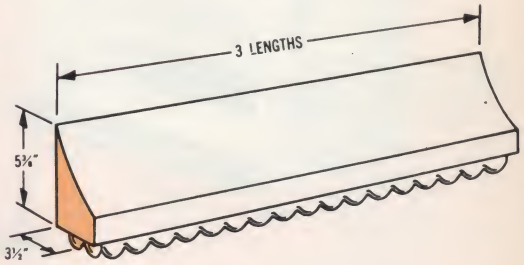

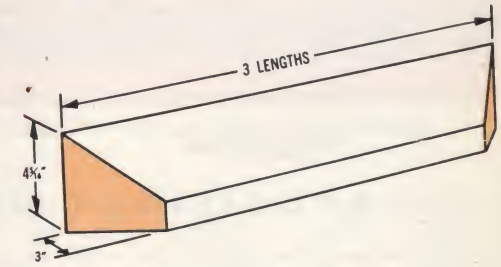

Accessories for Models 1501 and 2501 fit the Oven Ventilator where applicable (see Page 9).

OVEN VENTILATOR SPECIFICATIONS

No. 1801	Oven Ventilator
No. 2024	24" Stationary Stainless Steel Hood
No. 2027	27" Stationary Stainless Steel Hood
No. 2033	33" Stationary Stainless Steel Hood
No. 2124	24" Stationary Copper Hood
No. 2127	27" Stationary Copper Hood
No. 2133	33" Stationary Copper Hood
No. 2224	24" Salem Antique Copper Hood
No. 2227	27" Salem Antique Copper Hood
No. 2233	33" Salem Antique Copper Hood

Note: 45" lengths available for double oven use. Refer to price sheet.

KITCHEN VENTILATORS BY *Trade-Wind*

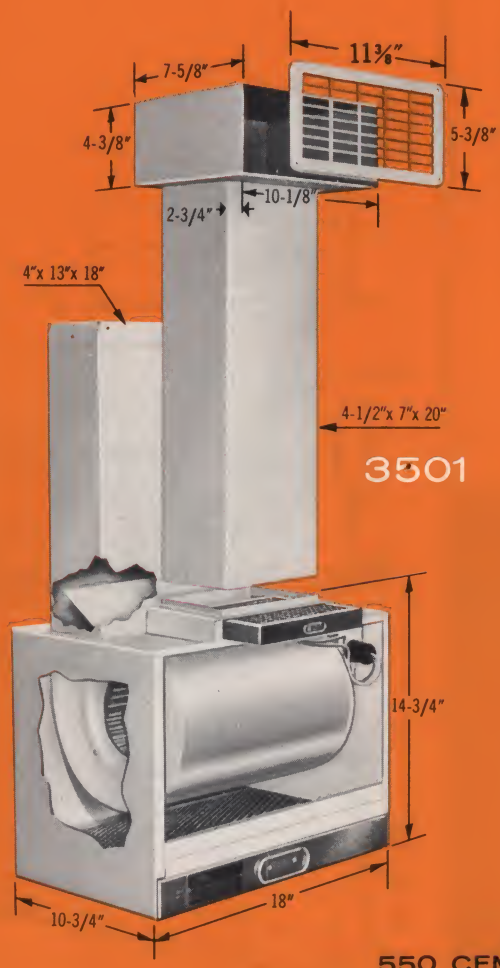

550 CFM

Model 3501 blower assembly with front cover removed. Note the two inlets, each equipped with filter, and the built-in backdraft damper.

3501 INSTALLATIONS

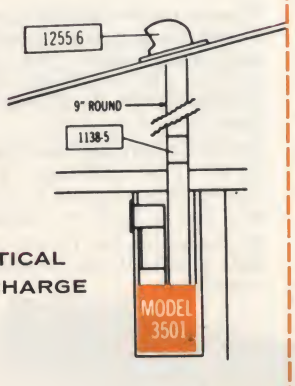

VERTICAL DISCHARGE

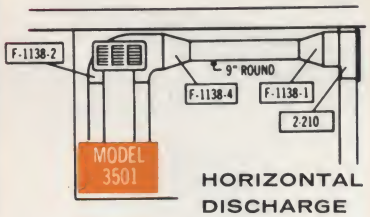

HORIZONTAL DISCHARGE

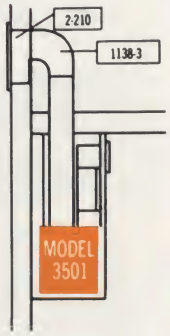

HORIZONTAL DISCHARGE

3501 ACCESSORIES

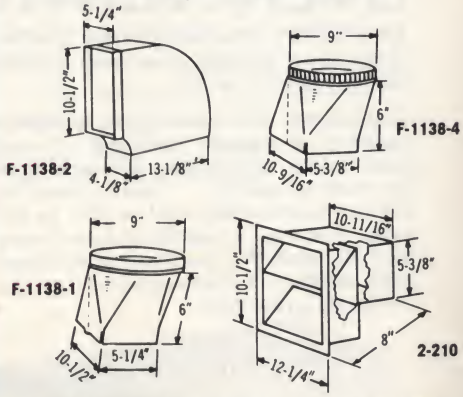

F-1138 Accessory Kit for discharge includes **F-1138-2** Transforming Elbow, **F-1138-4** and **F-1138-1** Offset Transitions and **2-210** Automatic Shutter.

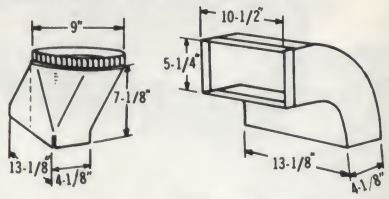

F-1138-5 Transition converts discharge to 9" round.

F-1138-3 Front or Rear Discharge Transition Elbow.

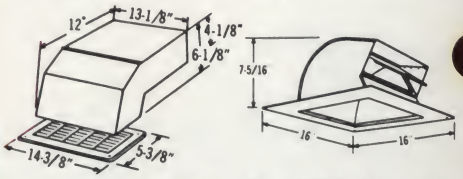

F-1138-7 Eave Cap includes back draft damper, grille.

No. 1255-6 Roof Jack. 10½" sq. inlet opening takes most duct sizes. Built-in backdraft damper.

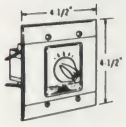

No. 30 4-Speed Switch. Switch control has stainless steel plate. Installs in a standard double outlet box.

SPECIFICATIONS

NUMBER & DESCRIPTION	CU. FT. ROOM CONTENT	AIR DELIVERY CFM	DUCT SIZE	MOTOR WATTS
3501 For cabinet installation. Dual centrifugal blowers.	3000	550	4"x13"	140

115 Volts A.C. 60 Cycles

The 3501 complete assembly includes motor and wheel assembly, housing, 2 filters, 18" discharge duct with built-in backdraft damper and soffit box, grille and 20" intake duct.

For installation in cabinet over stove

Model 3501 is installed in a cabinet directly above the kitchen range and may be used with or without a hood. It is equipped with dual inlets – one at the bottom of the cabinet and the other at the ceiling level. Both inlets are equipped with washable aluminum filters which are easily removed. Equipped with dual blowers, shielded motor, and built-in backdraft damper. Finish is white baked enamel. The 3501 is the ultimate in kitchen ventilation.

Trade-Wind does not supply the cabinet. Metal and wood cabinet manufacturers provide cabinets designed especially for Trade-Wind Ventilators. Installation and dimensional drawing is packed with each unit.

2501

For 2000 cu. ft. room
425 CFM
3½" x 10" duct
130 watts

2503 Same except with copper grille

2504 Same except with deep aluminum grille & filter

2505 Same except with deep copper grille & filter

For ceiling installation; dual centrifugal blowers, motor housing, interchangeable horizontal/vertical discharge, backdraft damper, aluminum grille.

1501

For 1000 cu. ft. room
300 CFM
3½" x 10" duct
105 watts

1503 Same except with copper grille

1504 Same except with deep aluminum grille & filter

1505 Same except with deep copper grille & filter

For ceiling installation; dual centrifugal blowers, motor housing, interchangeable horizontal/vertical discharge, backdraft damper, aluminum grille.

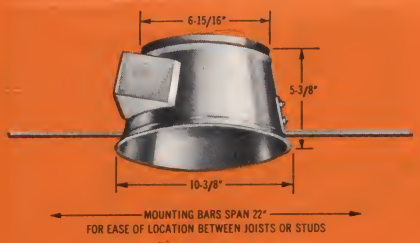

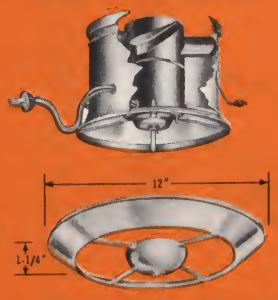

AF-7M

For 1000 cu. ft. room
300 CFM
7" round duct
50 watts

AF-7P Same except with ivory grille

For ceiling or wall installation; Axial Flow unit, motor, housing, vertical discharge, bright aluminum grille.

2501/1501 INSTALLATIONS

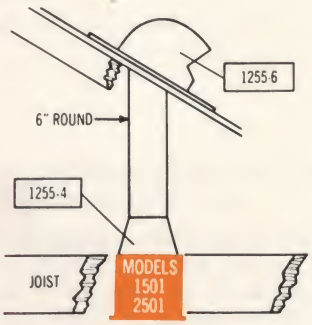

VERTICAL DISCHARGE

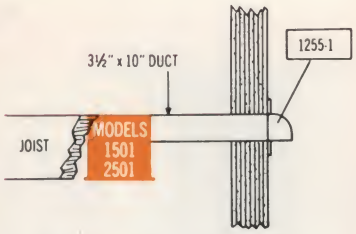

HORIZONTAL DISCHARGE

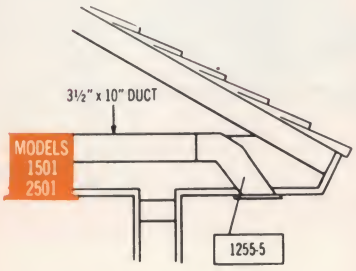

EAVE CAP DISCHARGE

2501/1501 ACCESSORIES

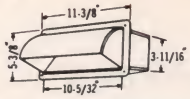

1255-1 Wall Cap & Automatic Shutter. For horizontal use only.

1186 Filter Grille Conversion Kit. Deep grille, filter, 4" screws and knurled knobs.

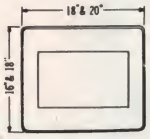

Grille Extension Plates. No. AG-9-4 to AG-9-7 for 1501 and 2501.

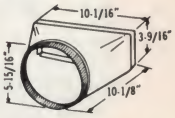

1255-4 Round Duct Transition.

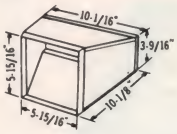

1255-3 Square Duct Transition.

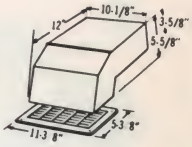

1255-5 Eave Cap. Includes backdraft damper and grille.

No. 1255-6 Roof Jack. 10½" sq. inlet opening takes most duct sizes. Built-in backdraft damper.

No. 20 Speed Control. 4 speeds and "Off."

Switch No. 50. 2 speeds and "Off." With duplex receptacle for 1201 and 1501.

2566 Slide Filter Mounting Kit fits Models 1501 and 2501. Easy-to-clean drawer type filters.

Switch No. 13-14-2. 2 speeds and "Off." For 1201, 1501, 1701 and AF-7.

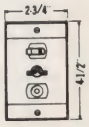

Switch No. C-13-14-25. Motor with pilot light for 1201, 1501 and AF-7.

AF-7 INSTALLATIONS

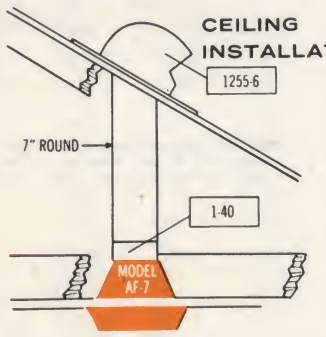

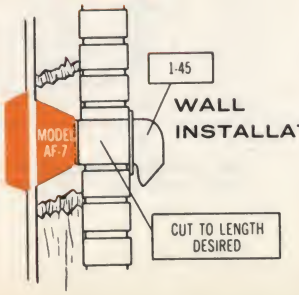

AF-7 ACCESSORIES

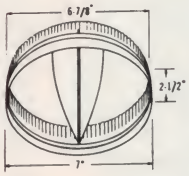

No. 1-40 Backdraft Damper. For vertical installations. Fits outlet collar on AF-7 Ventilator and takes 7" pipe.

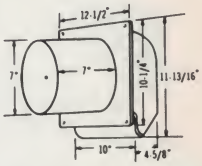

No. 1-45 Wall Cap And Automatic Shutter. For horizontal use in any wall up to 12" thick. 7" round duct fits outlet collar and may be cut to length.

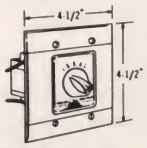

No. 20 4-Speed Switch. Switch control has stainless steel plate. Installs in a standard double outlet box.

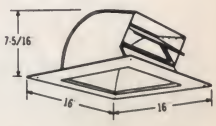

No. 1255-6 Roof Jack. 10½" sq. inlet opening takes most duct sizes. Built-in backdraft damper.

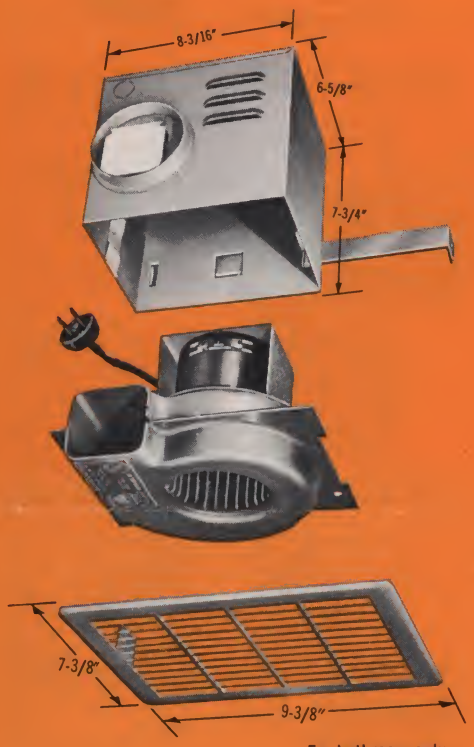

1201

VENTILATING

For bathroom only
100 CFM
4" round duct
50 watts

1205 Same except with bright chrome grille

For ceiling installation, single wheel, motor, housing, horizontal discharge, backdraft damper and white enamel grille.

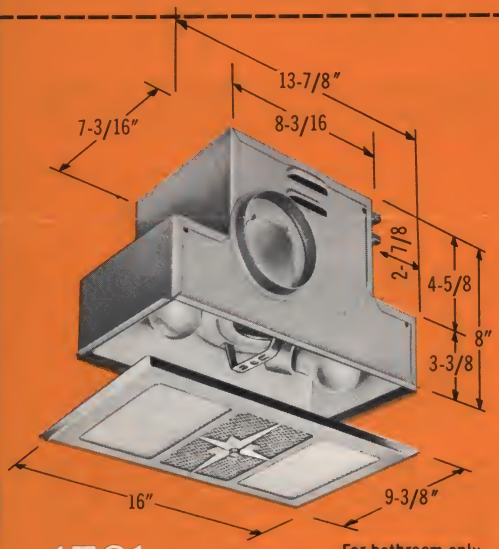

1701

VENTILATING
LIGHTING

For bathroom only
100 CFM
4" round duct
50 watts

For ceiling installation; combination ventilator/light, single wheel, motor, housing, horizontal discharge, 2 lamp sockets, chrome and Alba-lite glass grille. Uses two 75W lamps.

BATHROOM VENTILATORS

1201/1701 INSTALLATIONS

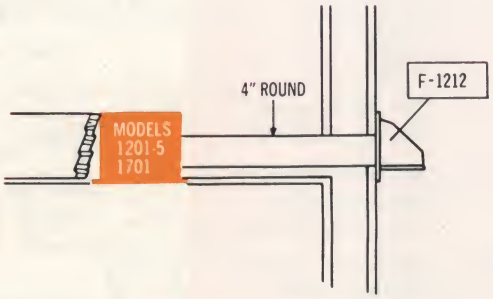

HORIZONTAL DISCHARGE

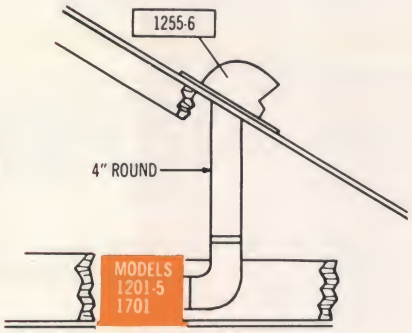

VERTICAL DISCHARGE

1201/1701 ACCESSORIES

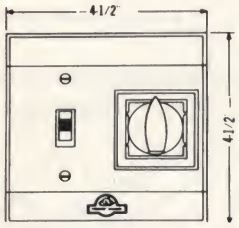

No. 60 Time Delay/Light Switch. Automatically turns off at any time up to 30 minutes. Separate switch controls light. For 1201 & 1701.

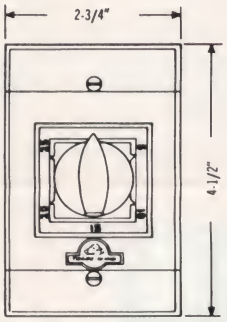

No. F-1285 Time Delay Switch. Dial can be set for any time up to 30 minutes. Automatically turns off ventilator. Fits standard switch box. For 1201, 1701 & 1501.

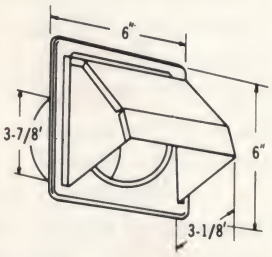

No. F-1212 Wall Cap. Split collar on cap fits into standard 4" round pipe.

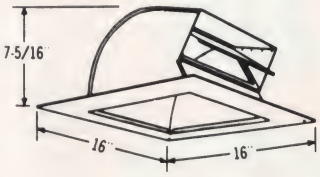

No. 1255-6 Roof Jack. 10½" sq. inlet opening takes most duct sizes. Built-in backdraft damper.

Trade-Wind WALL INSERT ELECTRIC HEATERS

The Trade-Wind electric wall heater is a radiant-type heater attractive in appearance and efficient in operation. It is furnished in two models, standard and full length, from 1000 through 2000 watts, with 17 variations. The line includes both 115 and 230 volt models with a selection of switch or thermostat control.

The louvered grille is polished aluminum, heating elements are Nichrome, centered in high-polish reflectors.

The heater housing is equipped with adjustable mounting bars, top and bottom, which expand to fit between studs. Bars have built-in spurs which are tacked into the studs for quick, easy location of the housing. The bars also locate the housing for plaster or dry wall construction.

STANDARD

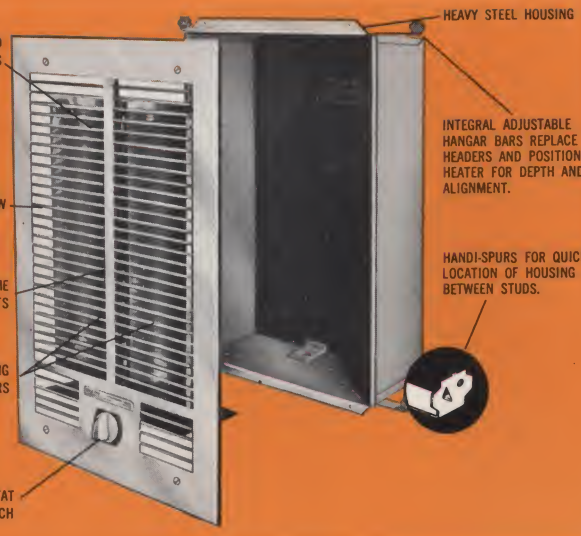

FULL LENGTH

SPECIFICATIONS

MODEL NO.	CONTROL	WATTS	VOLTS	BTU/HR	ROUGH-IN SIZE HIGH	ROUGH-IN SIZE WIDE	GRILLE HIGH	GRILLE WIDE	HOUSING* DEPTH	SHIPPING WEIGHT
121	None *	1000	115	3413	15″	10¼″	18″	12½″	3¾″	9 lbs
122	Switch	1000	115	3413	15″	10¼″	18″	12½″	3¾″	9 lbs
123	Thermostat	1000	115	3413	15″	10¼″	18″	12½″	3¾″	9 lbs
321	None *	1300	115	4437	15″	10¼″	18″	12½″	3¾″	9 lbs
322	Switch	1300	115	4437	15″	10¼″	18″	12½″	3¾″	9 lbs
323	Thermostat	1300	115	4437	15″	10¼″	18″	12½″	3¾″	9 lbs
521	None *	1500	115	5120	15″	10¼″	18″	12½″	3¾″	9 lbs
522	Switch	1500	115	5120	15″	10¼″	18″	12½″	3¾″	9 lbs
523	Thermostat	1500	115	5120	15″	10¼″	18″	12½″	3¾″	9 lbs
344	None *	1300	230	4437	15″	10¼″	18″	12½″	3¾″	9 lbs
345	Switch	1300	230	4437	15″	10¼″	18″	12½″	3¾″	9 lbs
346	Switch/Therm.	1300	230	4437	15″	10¼″	18″	12½″	3¾″	9 lbs
544	None *	1500	230	5120	15″	10¼″	18″	12½″	3¾″	9 lbs
545	Switch	1500	230	5120	15″	10¼″	18″	12½″	3¾″	9 lbs
546	Switch/Therm.	1500	230	5120	15″	10¼″	18″	12½″	3¾″	9 lbs
624	Thermostat	1650	115	5621	45″	6¾″	48″	9¾″	3¾″	16 lbs
224	Switch/Therm.	2000	230	6826	45″	6¾″	48″	9¾″	3¾″	16 lbs

* Note: For use with separate wall switch

SUGGESTED SPECIFICATIONS FOR ARCHITECTS

(For Ceiling Models) Furnish and install as specified or as indicated on the plans. Trade-Wind Ventilator Model No. ..... manufactured by Trade-Wind Motorfans, Inc., Rivera, California. Ventilator to be equipped with dripless grille and built-in backdraft damper. Duct to be run from unit to outside location as shown.

(For Cabinet Models) Furnish and install in cabinet location over range as specified or as indicated on the plans. Trade-Wind Ventilator Model No.....and Trade-Wind Hood No. .....manufactured by Trade-Wind Motorfans, Inc., Rivera, California. Ventilator to be equipped with built-in backdraft damper. Duct to be run from unit to outside location as shown.

SALES REPRESENTATIVES

Complete stocks carried by leading wholesalers in all areas. Trade-Wind products are shipped from Rivera, Calif., and Chicago, Ill.

Alabama: See Georgia

Arizona: John Allen Ware & Associates P.O. Box 4216 Commerce Station, Phoenix, Ariz.

Arkansas: See Dallas, Texas

California (Northern Part): Fred E. Reck, 73 Manor Court, Redwood City, California
ALSO: Reno, Nevada

California (San Diego & Imperial Counties): Edward L. Petersen Co., 709 Bank of America Building, San Diego 1, California

California (Southern Part): Trade-Wind Motorfans, Inc., 7755 Paramount Blvd., Rivera, California

Colorado: W. G. Cline & Company, 4500 Kalamath Street, Denver 4, Colorado
ALSO: Utah, New Mexico, Wyoming, Montana, Southern Idaho, Western Nebraska and El Paso, Texas.

Connecticut: See Massachusetts

Delaware: See Pennsylvania and Virginia

District of Columbia: See Virginia

Florida: See Georgia

Georgia: Frank B. Davis, 751 Chestnut St., N.W. Atlanta 18, Georgia
ALSO: North Carolina, South Carolina, Florida, Alabama and all except 16 Counties in W. Tenn.

Idaho: See Colorado & Washington

ILLINOIS: Seegmiller and Hess, Inc., 469 E. Ohio St., Chicago 11, Illinois.
ALSO: Central & Eastern Wisconsin & Northwestern Indiana

Indiana: See Illinois, Michigan and Ohio

Iowa: See Missouri

Kansas: See Missouri

Kentucky: See Ohio

Louisiana: Cressy Sales Company, 819 Royal Street, New Orleans 16, Louisiana
ALSO: Mississippi

Maine: See Massachusetts

Maryland: See Virginia

Massachusetts: Adelson Bros., 839 Beacon Street, Boston 15, Massachusetts
ALSO: Maine, New Hampshire, Vermont, Rhode Island

Michigan: Elmer R. Church, 804 South West Avenue, Jackson, Michigan
ALSO: Northern Parts of Indiana and Ohio

Minnesota: R. D. Little Co., 330 South 6th Street, Minneapolis 15, Minnesota
ALSO: North Dakota, South Dakota and Western Wisconsin

Mississippi: See Louisiana

Missouri: Curt H. Conrad Company, 1665 Jarboe, Kansas City 8, Missouri
ALSO: Kansas, Iowa and Central and Eastern Nebraska

Montana: See Colorado

Nebraska: See Missouri and Colorado

Nevada (Reno): See Northern California

(Clark County): See Southern California

New Hampshire: See Massachusetts

New Jersey: See New York and Pennsylvania

New Mexico: See Colorado

New York: H. M. Linter & Son, 11 Park Place, New York 7, New York (Metropolitan New York District and Northern half of New Jersey only)

New York: Walter E. Daw Co., 753 James Street — Suite 225, Syracuse 3, New York (Upper New York State only)

North Carolina: See Georgia

North Dakota: See Minnesota

Ohio: W. O. Armour Co., 320 Orchard Avenue, Niles, Ohio
ALSO: Kentucky, Southern Indiana & 16 Counties of Western Tennessee

Ohio (Northern Part): See Michigan

Ohio (Eastern Part): See Pittsburgh, Pennsylvania

Oklahoma: See Dallas, Texas
Oregon: Wm. O. Proby & Associates, 1308 N.W. Everett, Portland 9, Oregon

Pennsylvania: Wall & Holloway, Inc., 122 South 22nd Street, Philadelphia 3, Penna. (Eastern half of Pa. only).
ALSO: Parts of Delaware and New Jersey

Pennsylvania: Edw. A. Damrau, 7726 Edgewood Ave., Pittsburgh 18, Pa. (Western half of State only.)
ALSO: West Virginia and part of Eastern Ohio

Rhode Island: See Massachusetts

South Carolina: See Georgia

South Dakota: See Minnesota

Tennessee: See Georgia and Ohio

Texas: Arthur S. Jones, 306 Canterbury Hill, San Antonio 9, Texas (Southern Texas only)

Texas: L. R. Ward Company, 3009 Canton Street, Dallas 26, Texas. ALSO: Arkansas and Oklahoma

Texas (El Paso area): See Colorado

Utah: See Colorado

Vermont: See Massachusetts

Virginia: American Engineering and Equipment Company, 601 Belle View Blvd., Alexandria, Virginia. ALSO: Washington, D. C., Maryland, and Parts of Delaware and West Virginia

Washington: Wm. O. Proby & Associates, 2915 13th Avenue S.W., Seattle 4, Washington
ALSO: Northern Idaho

West Virginia: See Pennsylvania and Virginia

Wisconsin: See Illinois and Minnesota

Wyoming: See Colorado

Hawaiian Islands: Alfred E. Linzer Co., 1507 Kapiolani Blvd., Honolulu, T. H.

Foreign Division: Frazar and Hansen, Ltd., 301 Clay Street, San Francisco 11, California
Branches: New York, Los Angeles

Canada: General Sales Syndicate, 202 Rogers Bldg., 470 Granville St., Vancouver, B.C., Canada

Trade-Wind

MOTORFANS, INC.

7755 PARAMOUNT BOULEVARD, RIVERA, CALIFORNIA

All Prices and Specifications are subject to change or revision without notice. Patent Notice — TRADE-WIND U.S. PATENTS Nos. 2,349,668 and 2,710,573 cover these blowers. Other patents pending. Infringements or imitation of this equipment will be vigorously prosecuted. TRADE-WIND and name registered U.S. Patent Office. Listed as approved by Underwriters' Lab., Inc., and Canadian Standards Association.

Bulletin 620-N-8/57 Litho in U.S.A.

© 1957 TWMF, Inc.

SUGGESTED SPECIFICATIONS FOR ARCHITECTS

(For Ceiling Models) Furnish and install as specified or as indicated on the plans. Trade-Wind Ventilator Model No. ..... manufactured by Trade-Wind Motorfans, Inc., Rivera, California. Ventilator to be equipped with dripless grille and built-in backdraft damper. Duct to be run from unit to outside location as shown.

(For Cabinet Models) Furnish and install in cabinet location over range as specified or as indicated on the plans. Trade-Wind Ventilator Model No.....and Trade-Wind Hood No. Rivera, ckdraft shown.

SALES REPRESE

Complete stocks ca

Alabama:
Arizona: P.O. Box
Arkansas:
California Manor Co ALSO: Re
California Edward L Building,
California Inc., 775
Colorado: Street, De ALSO: Ut Southern Texas
Connectic
Delaware:
District of
Florida: S
Georgia: F Atlanta 18 ALSO: Nor Alabama a
Idaho: See
ILLINOIS: St., Chicag ALSO: Cen western In
Indiana: S
Iowa: See
Kansas: S
Kentucky:
Louisiana: Street, Ne ALSO: Miss
Maine: See
Maryland:
Massachuse Boston 15,

nd Chicago, Ill.

ay, Inc., 122 South Penna. (Eastern half
nd New Jersey
au, 7726 Edgewood stern half of State
rt of Eastern Ohio
usetts
Ohio
anterbury Hill, San exas only)
009 Canton Street, nsas and Oklahoma
lorado
g and Equipment Blvd., Alexandria, D. C., Maryland, est Virginia
Associates, 2915 Washington
nia and Virginia
innesota
Linzer Co., 1507
Hansen, Ltd., 301 , California eles
ate, 202 Rogers ver, B.C., Canada

Digitized by

ASSOCIATION FOR PRESERVATION TECHNOLOGY, INTERNATIONAL
www.apti.org

BUILDING TECHNOLOGY HERITAGE LIBRARY

https://archive.org/details/buildingtechnologyheritagelibrary

From the collection of:

Mike Jackson, FAIA

Trade-Wind

MOTORFANS, INC.

7755 PARAMOUNT BOULEVARD, RIVERA, CALIFORNIA

All Prices and Specifications are subject to change or revision without notice. Patent Notice — TRADE-WIND U.S. PATENTS Nos. 2,349,668 and 2,710,573 cover these blowers. Other patents pending. Infringements or imitation of this equipment will be vigorously prosecuted. TRADE-WIND and name registered U.S. Patent Office. Listed as approved by Underwriters' Lab., Inc., and Canadian Standards Association.

Bulletin 620-N-8/57 Litho in U.S.A.

© 1957 TWMF, Inc.